Product Code 1241TB

12"x41"x 2 1-4" Step Tread Broom Finish w/ $\frac{3}{8}$" Bolts

Camp Logan Cement Works Inc.
www.camplogancement.com
800-445-9062
clcw@camplogancement.com

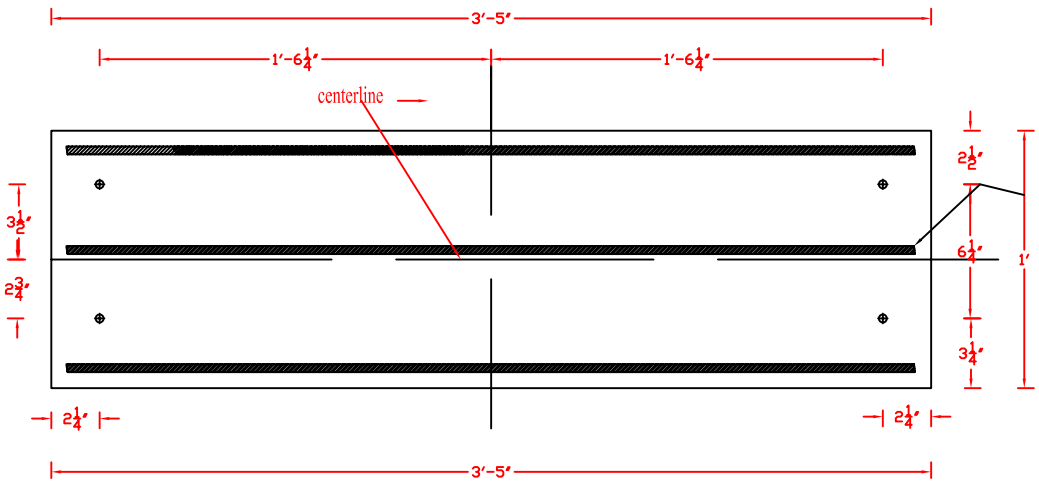

3 PIECES OF #3 REBAR EMBEDED 3/4" IN TREAD

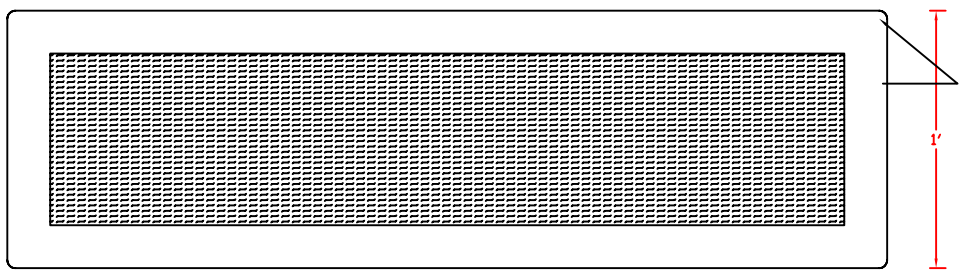

BRUSH FINISH W/ 2" EDGING ON SIDES AND A $\frac{3}{8}$" RADIUS

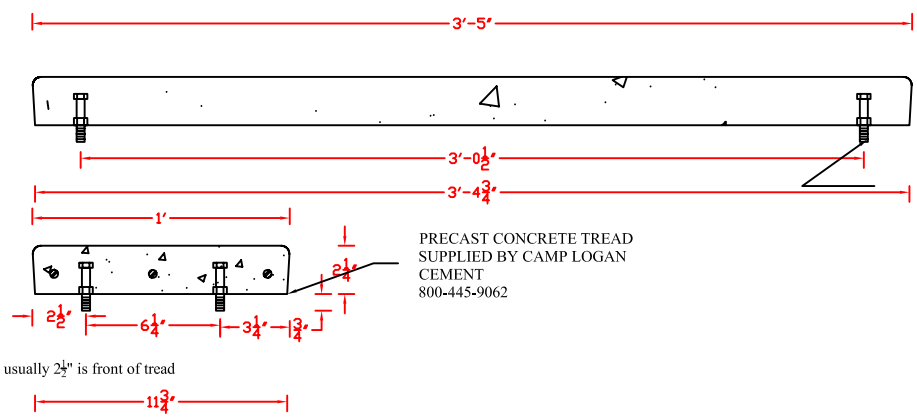

usually 2½" is front of tread

PRECAST CONCRETE TREAD
SUPPLIED BY CAMP LOGAN
CEMENT
800-445-9062

3/8" BOLTS ENCASED IN CONCRETE W/ SUPPORT NUT